FSP2260-RT-i76700TE

21.5-inch Industrial Panel PC

Features

- Easy to Monitor, Switch and Control External PC
- 1920 x 1080 Resolution Full HD LCD Display
- Compact Mechanical with Solid Design

SPECIFICATION

Display	Size/Panel Type	21.5” TFT LCD Panel
	Resolution	1920 x 1080
	Brightness (cd/m²)	250 cd/m² (Optional: 1000cd/m²)
	Contrast Ratio	5000:1
	Response Time	25ms
	Backlight	LED Backlight Unit
	Colors	16.7M Colors
	Viewing Angle (H/V)	178°/178°
	Surface Hardness	7H, AR Glass
Touch Screen	Touch Screen Type	Resistive Touch (Optional: P-CAP Touch)
	Surface Hardness	3H (7H)
Environment	Operating Temperature	0°C~+50ºC
	Storage Temperature	-20°C~+60ºC
	Humidity	10%~95% RH (Non-Condensing)
	Waterproof Rating	IP65 Waterproof Front Bezel
Mechanical	Mounting	VESA 75 x 75mm; 100 x 100mm
	Dimension/Weight	580mm (W) x 380mm (H) x 70mm (D) / 13Kgs
	Housing Material / Color	Metal / Black
Power	Power Input	DC24V Input, w/ AC100~240V Power Adapter
	Power Consumption	70W
System	Processor	Intel® Core™ i7-6700TE Processor
	OSD	PC On/Off, Menu, Auto, On/Off, Up, Down
	I/O Interface	USB 3.0 x 4, HDMI x 1, DVI x 1, LAN x 2, DC in x 1
	Certification	FCC/CE/RoHS Compliance

Specifications subject to change without notice

ORDERING CODE

FSP2260-RT-i76700TE-XXXX

-PCT= P-CAP Touch Screen
-RT= Resistive Touch Screen
-HB1000 = 1000nits High Brightness
-W = Wide Temperature, -30°~+60°C
-OB = Optical Bonding
-WF = WiFi Module + Antenna

ACCESSORIES

- AC/DC Power Adapter x 1

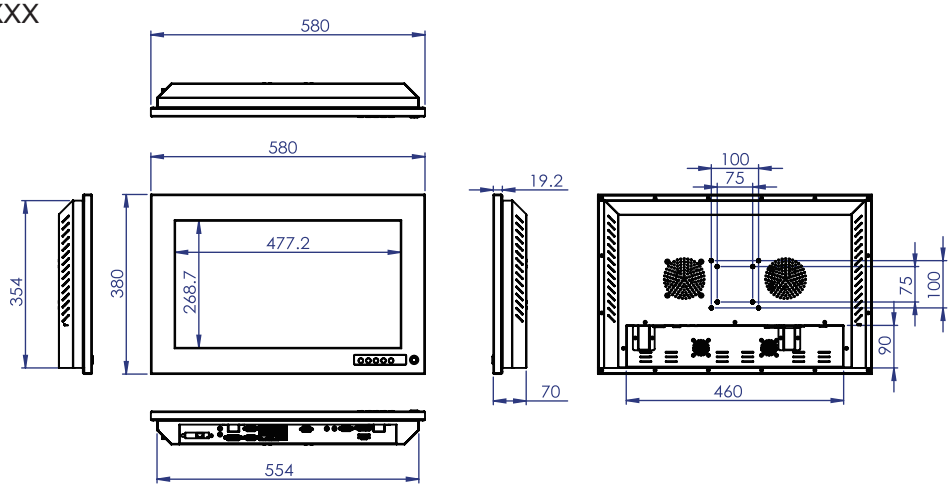

Unit: mm